Truck Dimension Sheet

CLEANFIX®
Reversible Fans For Radiator Cleaning

Machine Information		
Manufacturer		
Model		
Engine		
Horsepower		
Serial number		
Engine RPM		
Fan RPM		
Crank Pulley Diameter		
Fan Pulley Diameter		
System Voltage	12V	24V
Compressed Air System	Yes	No

Customer Information	
Company Name	
Company Address	
City	
Country	
Zip/Postal Code	
Telephone:	
Fax:	
Contact Name	
Email	

Fan Information				
Number of blades				
Diameter	**D**			
Type	Suction	Blower		
Rotation	clockwise	counter clockwise		
	(Looking through fan towards fan drive)			
Fan Drive Information				
Mounting Bolt Circle	**LK**			
# of Mounting Bolts				
Size of mounting Bolts	**SD**			
Pilot Diameter	**AD**			
Pilot	Male			Female
Clutch Manufacturer				
Clutch Part Number				
Additional Information if Known				
Airflow Requirements				
Fan Blade Pitch				
Shroud Information				
Type of Shroud	Yes	No	Material	Additional Dimensions Required
Box				No
Bell				Yes
Ring				Yes

Include any Schematics or Models of current fan assembly

Notes:

Dimension	Description	Measurement	
		Inches	Millimeters
A	Distance from Radiator to Fan Mounting Surface (rad to where clutch will break down)		
B1	Distance from Radiator to Closest object to Blades, Drive Side (crank pulley, brace, fingerguard, etc.)		
B2	Distance from Fan Axis to Closest Object to Blades Engine Side		
C	Depth of Shroud		
D	Diameter of Fan		
E1	Distance from Radiator to Closest object to Blades, Radiator Side (Brace, Cooler lines,hoses,etc.)		
E2	Distance from Fan Axis to Closest Object to Blades Radiator Side		
F	Radiator to Front of Fan Blade		
G	Radiator to back of Fan Blade		
S	Minimum Tip Clearance (fan blade to shroud dimension)		
H	Radiator to clutch mouning surface *If clutch can be removed*		

Park Lake Equipment Sales Lethbridge, AB. 403-381-4706 Toll-Free 1-800-567-4706
Fax 403-381-3788 www.parklakeequipmentsales.ca sales@parklakeequipmentsales.ca
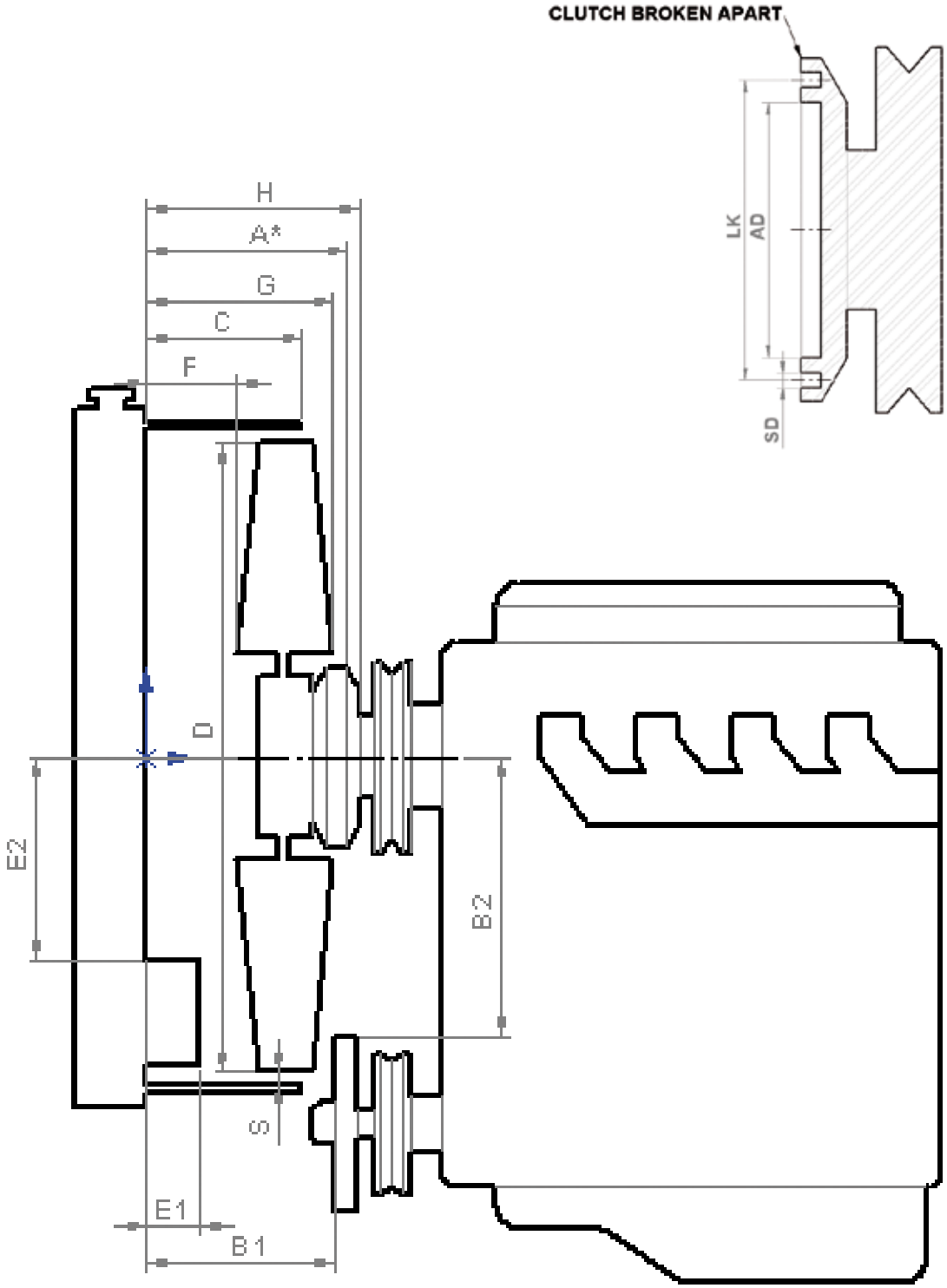
CLEANFIX®
Reversible Fans For Radiator Cleaning